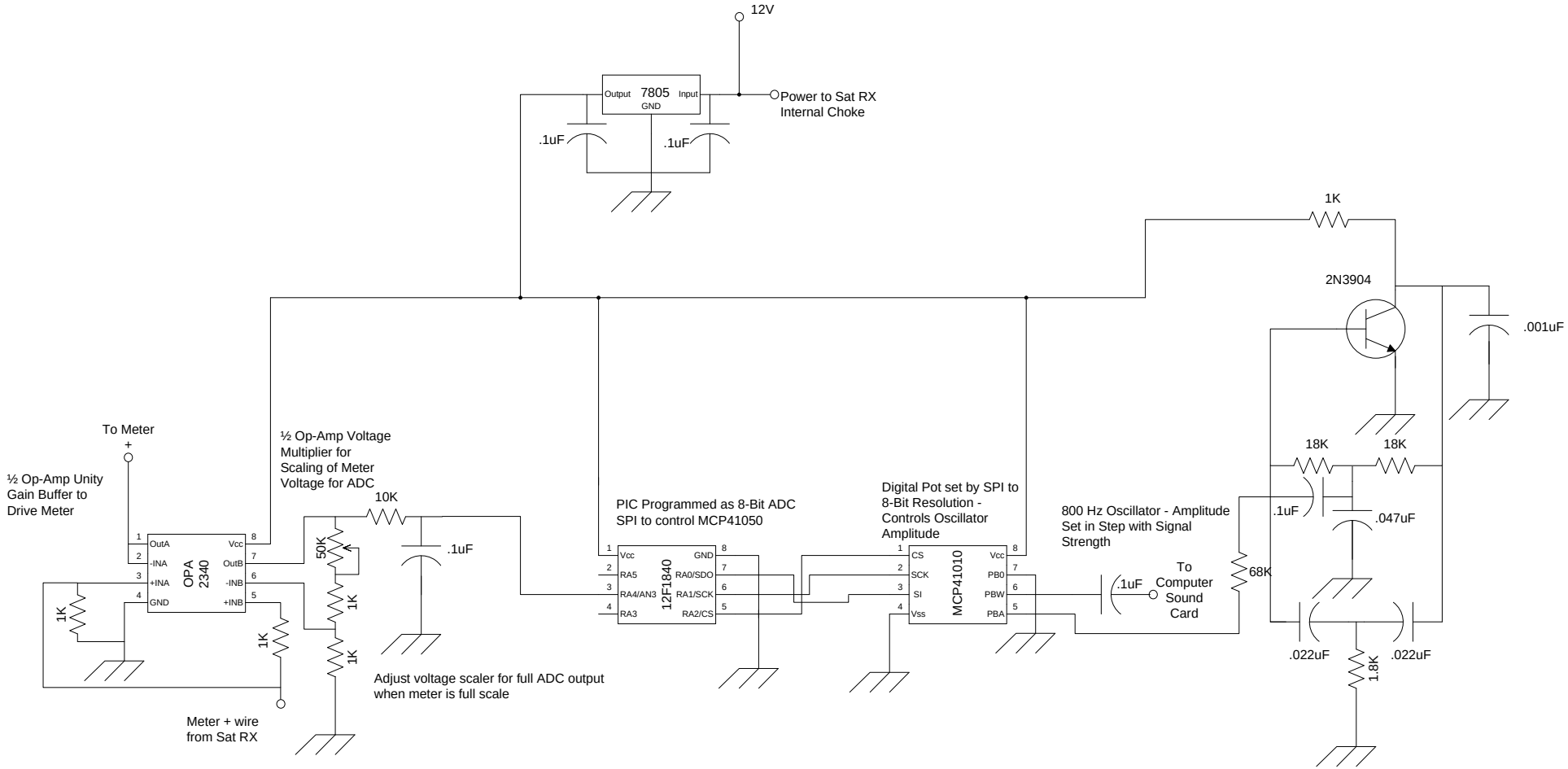Radio Telescope ADC Interface
Between Sadoun S-SF95L and Radio SkyPipe